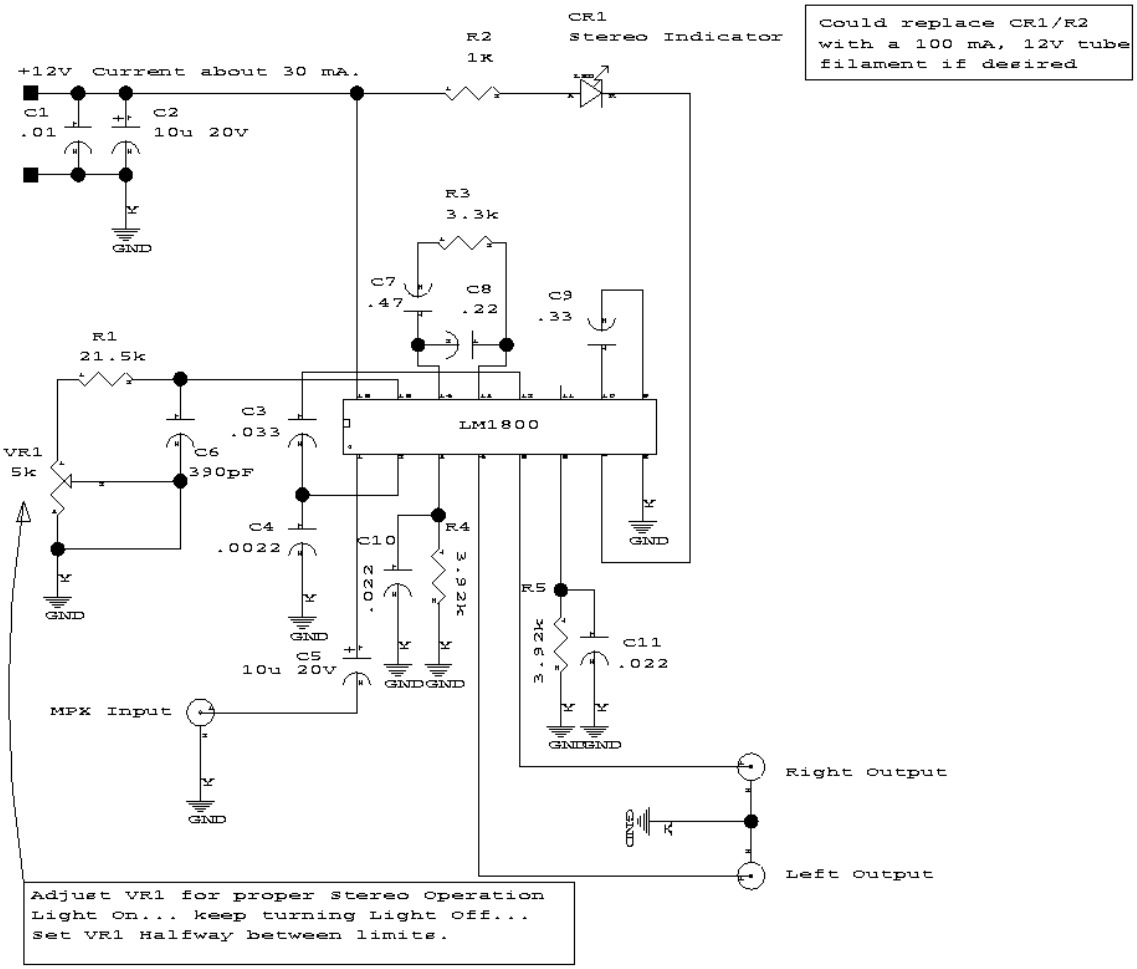

FM Multiplex Adaptor